Notes:
I've diagramed this using 4 relays. The same thing can be accomplished using two double-pole, double-throw relays.
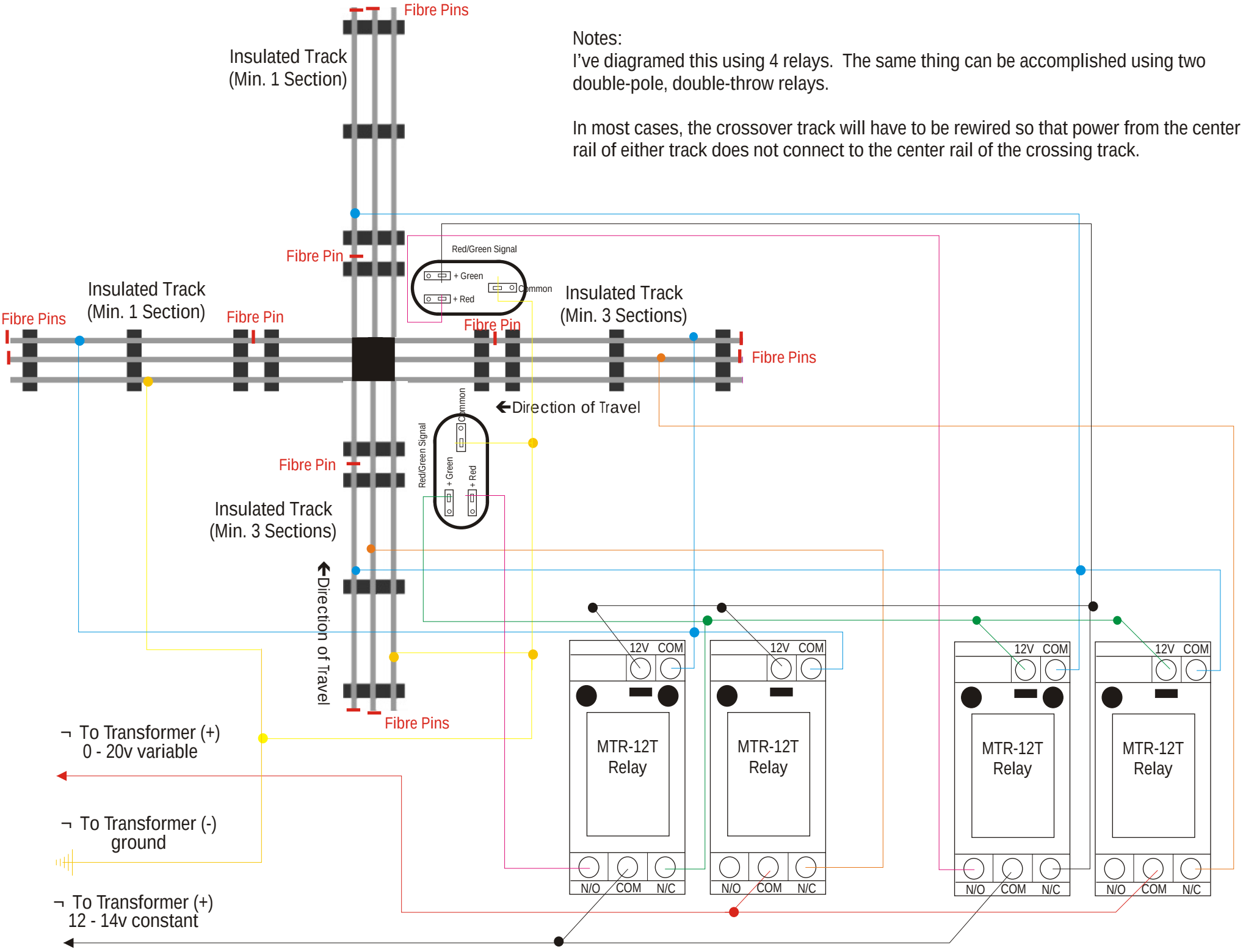
In most cases, the crossover track will have to be rewired so that power from the center rail of either track does not connect to the center rail of the crossing track.