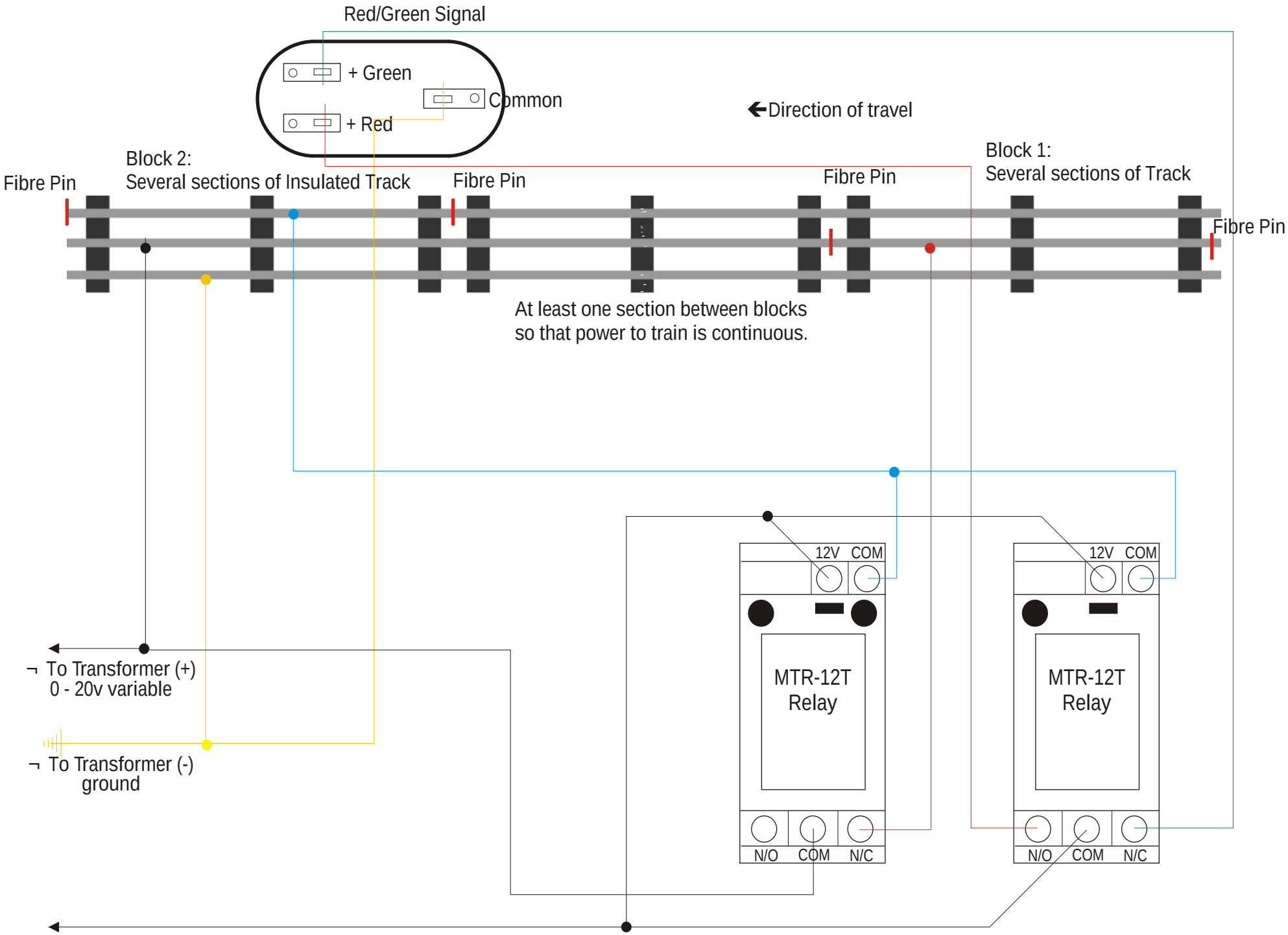

Note: I've diagramed this using 2 relays. The same thing can be accomplished using one double-pole, double-throw relay.