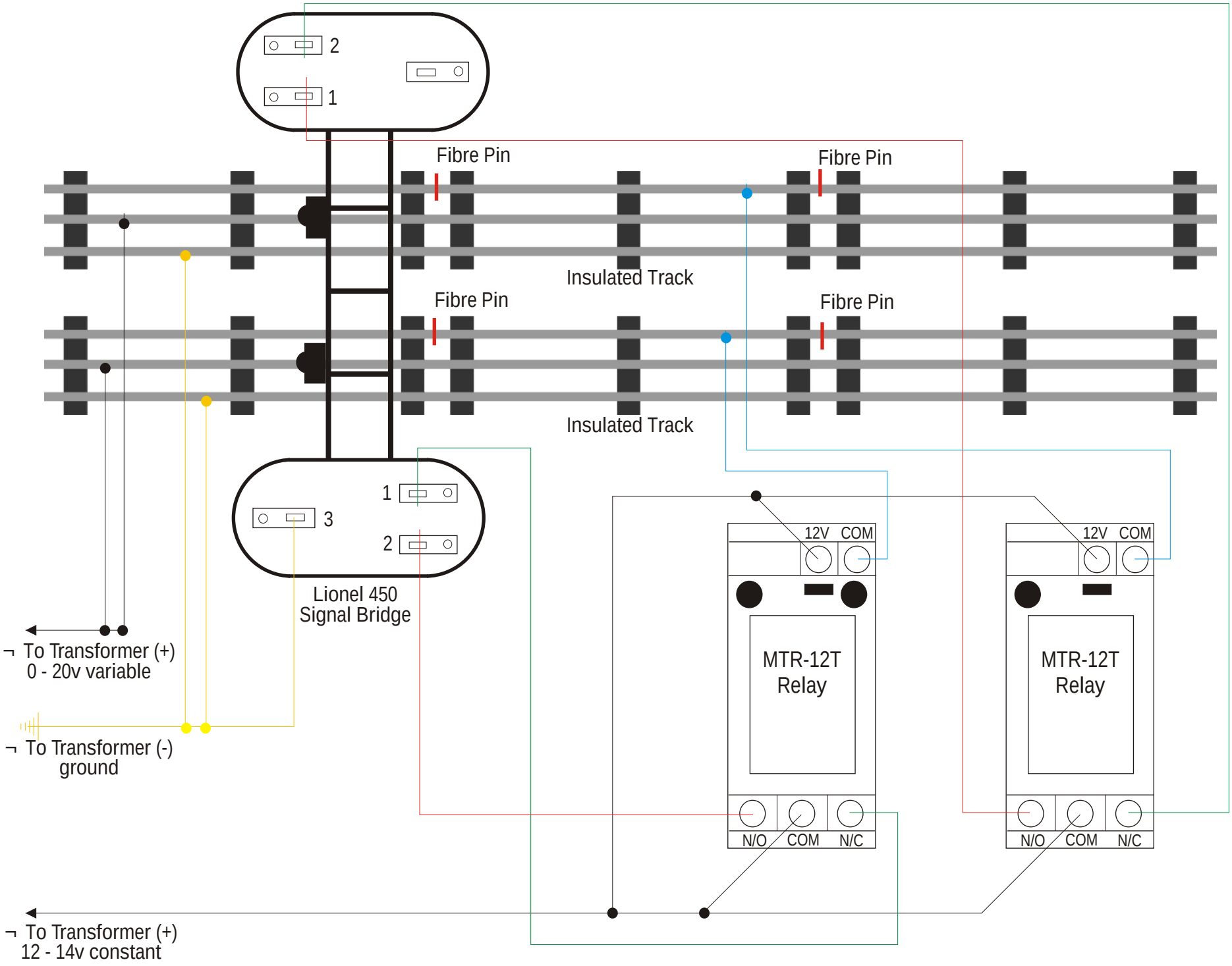
2
1
Fibre Pin
Fibre Pin
Insulated Track
Fibre Pin
Fibre Pin
Insulated Track
1
3
2
Lionel 450
Signal Bridge
12V COM
MTR-12T
Relay
N/O COM N/C
12V COM
MTR-12T
Relay
N/O COM N/C
To Transformer (+)
0 - 20v variable
To Transformer (-)
ground
To Transformer (+)
12 - 14v constant